# CVT-MA12EX transformer for MA12EX Modular Line Array Loudspeakers

**For use only by trained installers**

**Kun til brug for erfarne installatører**

**Montage ausschließlich durch ausgebildetes Installationspersonal**

**Para uso exclusivo de instaladores capacitados**

**Réservé aux installateurs ayant suivi une formation**

**Solo per l'uso da parte di installatori professionisti**

**Mag alleen gebruikt worden door ervaren technici**

**Ska endast användas av utbildade installatörer**

Contents
Indhold
Inhalt
Contenido
Contenu
Contenuto
Inhoud
Innehåll

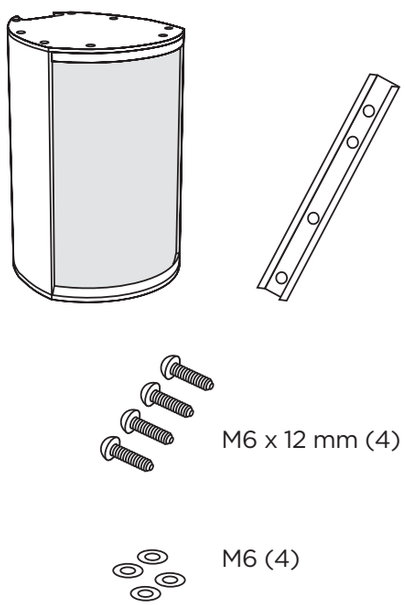


## 1

Choices
Valgmuligheder
Optionen
Opciones
Au choix
Opzioni
Keuzes
Alternativ

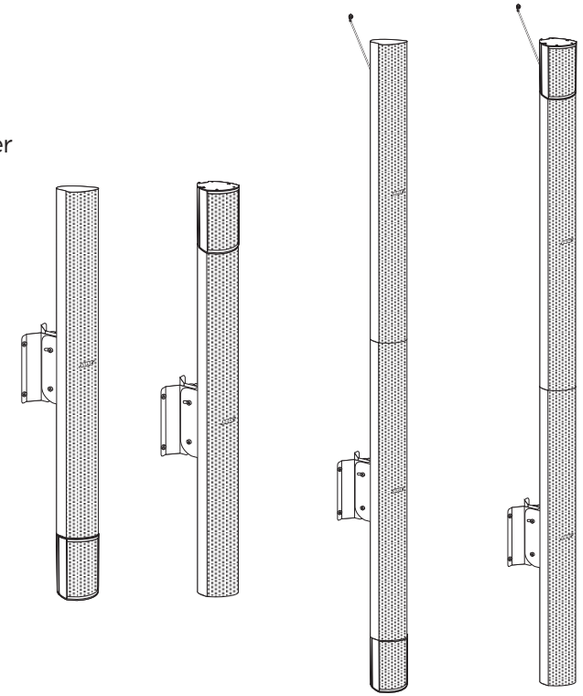

## 2

Wiring Schematic
Oversigt over ledningsføring
Schaltschema
Esquema de cableado
Schéma de raccordement
Schema del cablaggio
Bedradingsschema
Schema för ledingsdragning

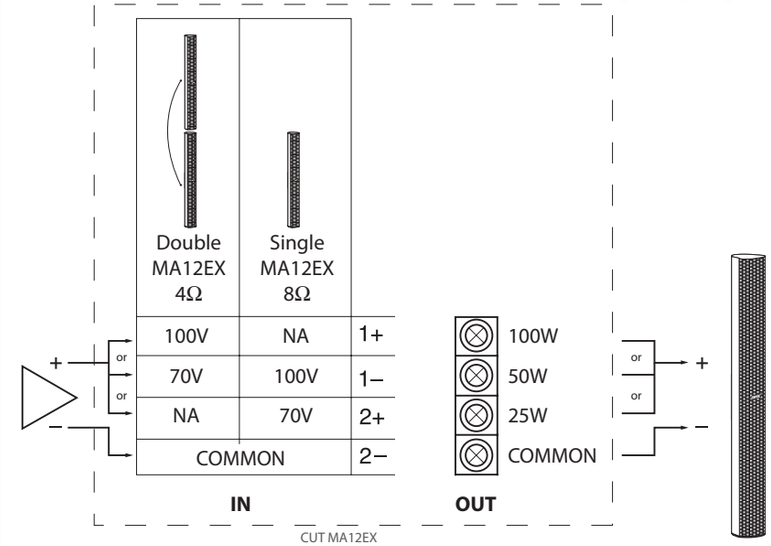


## 3

Tighten to:
Spænd indtil:
Festziehen auf:
Apretar a:
Force de serrage :
Avvitare a:
Aandrijven tot:
Dra åt till:

20-25 in*lb
(2.3-2.8 Nm)

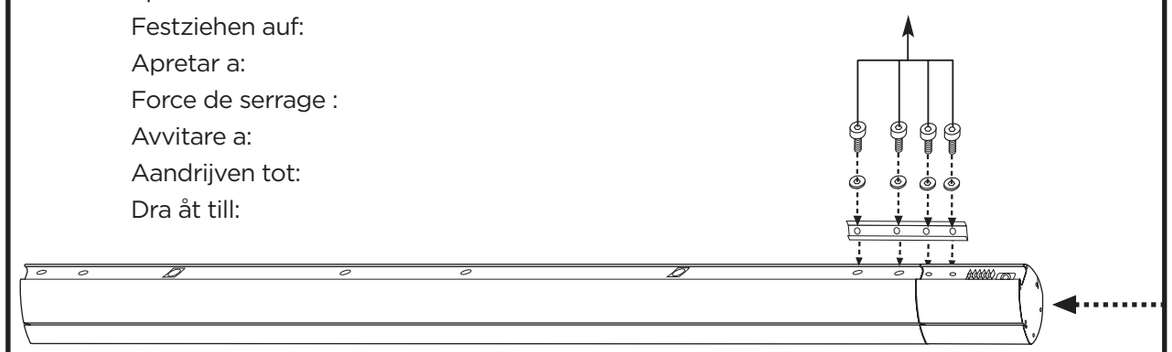

**China Importer:** Bose Electronics (Shanghai) Company Limited, Level 6, Tower D, No. 2337 Gudai Rd. Minhang District, Shanghai 201100

**EU Importer**: Bose Products B.V., Gorslaan 60, 1441 RG Purmerend, The Netherlands

**Mexico Importer**: Bose de México, S. de R.L. de C.V., Paseo de las Palmas 405-204, Lomas de Chapultepec, 11000 México, D.F. For importer & service information: +5255 (5202) 3545

**Taiwan Importer**: Bose Taiwan Branch, 9F-A1, No. 10, Section 3, Minsheng East Road, Taipei City 104, Taiwan. Phone Number: +886-2-2514 7676

**UK Importer:** Bose Limited Bose House, Quayside Chatham Maritime, Chatham, Kent, ME4 4QZ, United Kingdom

**Bose Corporation**, Framingham, MA 01701, U.S.A. 1-877-230-5639

Bose is a trademark of Bose Corporation.

©2023 Transom Post OpCo LLC. All rights reserved.
Framingham, MA 01701 USA
BoseProfessional.com
AM319192 Rev. 02
May 2023

319192-0030